VIBRAS with radio communication to the measuring stations
Remote control and data transfer with mobile GPRS/3G radiomodem

Where insuperable ground barriers like highways or rivers prevented the connection of the measuring places with cables to a single VIBRAS evaluation instrument, there is a solution with a radio communication

On the building site, the mobile GSM/GPRS/3G radio-modem makes the remote control and data communication possible between the VIBRAS and your office.

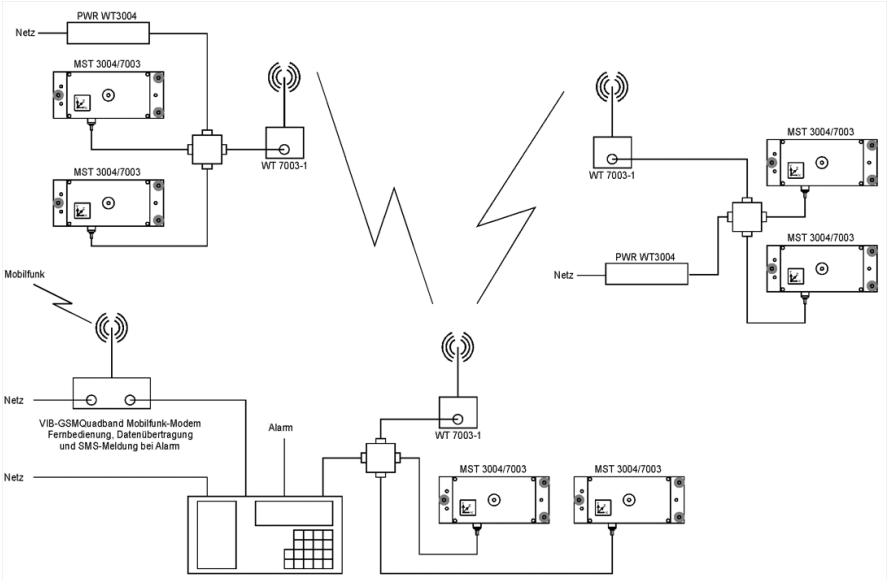

1.1 Radio Modem WT7003-1 and Power Supply PWR WT3004

The radio modem WT7003-1 makes the data communication possible between the MST3004 / 7003 measuring stations and the VIBRAS evaluation instrument.

The radio modems WT7003-1 have a general admittance and may be used without license. The range of the radio communication amounts by optimal installation and visual contact up to 1.2 km.

- A VIBRAS Evaluation Instrument with connect WT7003-1 can broadcast up to 16 groups of WT7003-1 and MST 3004/7003.
- Up to a number of 16 measuring station MST 3004/7003 can be connected to a remote WT7003-1.
- Every group of WT7003-1 and MST 3004/7003 requires an power supply with a PWR WT3004
- The radio WT7003-1 which is connected directly to the VIBRAS is supplied from it with energy and doesn't need a PWR WT3004 power supply.
- The wiring takes place like up to now.
- The existing cables and distribution boxes can be used.

All settings of the radios WT7003-1 can be carried out with a PC computer thru the serial interface and the provided program. The radios WT7003-1 can work on one of 2 different control channels. On the building site the field strength can be monitored with the PC program.

1.2 Mobile Radio Modem VIB-GSM

The VIB-GSM mobile radio modem makes the remote control and data communication possible between the VIBRAS and a PC on the GSM/GPRS/3G radio network.
In addition, the VIBRAS can dispatch Alarm, Warning or Data messages by SMS and/or E-mail.
With the provided PC program, you can configure and test the modem. On the building site the field strength and connection quality can also be checked to set up if the aerial at the best place.